RANGE TRIBUNE HE

UNVENTED HOT WATER CYLINDERS

INSTALLATION AND MAINTENANCE INSTRUCTIONS

ISSUE 20 FEBRUARY 2014

PAGE	CONTENT
1	Introduction
2	Storage, Handling & Supply Requirements
3	Component Table
4	Sitting the unit
5	General Installation
7	Discharge Arrangement
9	Technical Specifications: Slimline - Direct & Indirect
10	Technical Specifications: Direct & Indirect
11	Technical Specifications: Ecocyl Direct & Indirect
12	Technical Specifications: Solar - Direct & Indirect
13	Solar Coil Installation
14	Solar High Limit
15	S-Plan Wiring Schematics
16	Y-Plan Wiring Schematics
17 - 18	Pre-Plumbed Wiring Schematics
19	Pre-Plumbed Installation
20	Technical Specifications: Pre-Plumbed
21	Commissioning & Servicing
22	Fault Finding & User Instructions
23	Guarantee - Terms & Conditions
26	Technical Specification
27 - 28	Specification & Performance
30	Commissioning Check Sheet
31	Service Record

INTRODUCTION

The TRIBUNE HE Unvented cylinder is made from Duplex Stainless Steel for excellent corrosion resistance. TRIBUNE HE has a strong rust-proofed steel case and is highly insulated with environmentally friendly foam.

TRIBUNE HE is supplied complete with all the necessary safety and control devices needed to connect to the cold water mains. All are pre-adjusted. High quality controls have been selected to combine high flow rate performance with minimum pressure drop to make TRIBUNE HE perform well in all areas, even those with poor water pressure. TRIBUNE HE is KIWA approved to show compliance with Building Regulations G3+L.

benchmark

Benchmark places responsibilities on both manufacturers and installers. The purpose is to ensure that customers are provided with the correct equipment for their needs, that it is installed, commissioned and serviced in accordance with the manufacturer's instructions by competent persons and that it meets the requirements of the appropriate Building Regulations. The Benchmark Checklist can be used to demonstrate compliance with Building Regulations and should be provided to the customer for future reference.

Installers are required to carry out installation, commissioning and servicing work in accordance with the Benchmark Code of Practice which is available from the Heating and Hotwater Industry Council who manage and promote the Scheme. Visit www.centralheating.co.uk for more information.

IMPORTANT NOTE TO THE INSTALLER

Read these instructions before commencing installation. Unvented cylinders are a controlled service as defined in the latest edition of the building regulations and should only be fitted by a competent person.

The relevant regulations are: England and Wales – Building Regulation G3, Scotland – Technical Standard P3, N Ireland – Building Regulation Part F
After installation the Benchmark check list must be completed and left, with these instructions, with the householder for future reference.

STORAGE PRIOR TO INSTALLATION

TRIBUNE HE should be stored in its original packaging in an upright position in an area free from excessive damp.Regulations G3+L.

HANDLING PRODUCT

The TRIBUNE HE should be carried upright where possible. Assessements of risks for carrying the cylinder should be conducted. Use more than 1 person for carrying where appropriate. Always follow latest guide lines for lifting techniques, to avoid injury and damage to the product.

WATER SUPPLY

TRIBUNE HE operates at 3 bar (controlled by the inlet control set) and is capable of delivering in excess 50 litres per minute. The high quality inlet control set has been designed to make the most of the flow rates available, however the performance of any unvented system is only as good as the mains water supply. The maximum possible water demand should be assessed, taking into consideration that both hot and cold services are supplied simultaneously from the mains.

The water supply should be checked to ensure it can meet these requirements. If necessary, consult the local water company regarding the likely pressure and flow rate availability.

If measuring the water pressure, note that a high static (no flow) mains pressure is no guarantee of good flow availability. In a domestic installation 1.5 bar and 25 l/min. should be regarded as the minimum. The maximum mains pressure that the inlet control set can accept is 12 bar.

Consideration should be given to upgrading existing ½" (15mm) cold mains pipework to a larger size if the recommended minimum pressure/flow rate is not being achieved.

ELECTRIC SUPPLY

The TRIBUNE HE requires 240 Volt electrical supply for the immersion elements. The standard issue immersion heaters are designed fordomestic use. The electrical supply to each immersion heater must be fused at 13A via a double pole isolating switch to BS 3456. The cable must be at least 2.5mm2 heat resistant (85°C HOFR) sheathed flex complying to BS 6141:1981 Table 8.

* The immersion heater provided with Indirect cylinders is intended for back-up use. If the water quality is aggresive or the heater is to be used on a regular basis it is recommended to exchange for a IMHTRSS or titanium element.

UNPACKING THE UNIT

Tribune HE comes complete with the fittings required to complete the installation. Please see over for component content list.

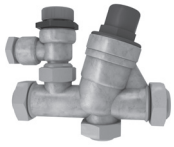

High flow rate inlet control set
CONTSETALT533

Temperature and pressure relief valve
VALVETP1/2ALT

Acetal tundish 15 x 22 mm
TUNDPL15ALT

Expansion Vessel

- 60, 90, 120 & 150 ltr units - 12 ltr vessel
EXPVESB12ALT
- 180, 210 & 250 ltr units - 18 ltr vessel
EXPVESB18ALT
- 300 ltr units - 25 ltr vessel
EXPVESB24ALT

Two port valve
VALVE2PORTH

Incoloy long life 3 kW immersion heater
IMHTRSS - DIRECT I
MHTRTF327A - INDIRECT *

Dual thermostat
STATDUALALT

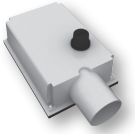

High Limit thermostat
STATHIGHALT

Installation &
Maintenance Instructions

COMPONENT CONTENT TABLE

	Slimline Direct Models (Electric)	Slimline Indirect Models	Direct Models	Indirect Models	Ecocyl Direct Models	Ecocyl Indirect Models	Solar Direct Models	Solar Indiect Models	Indirect pre-plumbed models - 1 zone heating	Indirect pre-plumbed models - 2 zone heating	Solar indirect pre-plumbed models - 1 zone heating	Solar indirect pre-plumbed models - 2 zone heating
Inlet Control set	⊙	⊙	⊙	⊙	⊙	⊙	⊙	⊙	⊙	⊙	⊙	⊙
Temp & Pressure relief valve	⊙	⊙	⊙	⊙	⊙	⊙	⊙	⊙	⊙	⊙	⊙	⊙
Tundish	⊙	⊙	⊙	⊙	⊙	⊙	⊙	⊙	⊙	⊙	⊙	⊙
Expansion vessel	⊙	⊙	⊙	⊙	⊙	⊙	⊙	⊙	⊙	⊙	⊙	⊙
Immersion Heater (Direct)	⊙		⊙		⊙		⊙					
Immersion Heater (Indirect)		⊙		⊙		⊙		⊙	⊙	⊙	⊙	⊙
Two Port Valve		⊙		⊙		⊙		⊙	⊙	⊙	⊙	⊙
Dual Thermostat		⊙		⊙		⊙		⊙	⊙	⊙	⊙	⊙
Single High Limit Stat							⊙	⊙	⊙	⊙	⊙	⊙
Sensor pocket retaining bungs							⊙	⊙			⊙	⊙
Robo-Kit									⊙	⊙	⊙	⊙
TP9000									⊙	⊙	⊙	⊙
TP5000										⊙		⊙
Installation & Maintenance Instructions	⊙	⊙	⊙	⊙	⊙	⊙	⊙	⊙	⊙	⊙	⊙	⊙

Direct Models (Electric)
Direct Solar Models (Electric + Coil)
Indirect Models (Single Coil)
Indirect Solar Models (Twin Coil)

SITTING THE UNIT

TRIBUNE HE can supply outlets above it or at some distance from it. Site the unit to minimise “dead leg” distances, especially to the point of most frequent use.

Outlets above the TRIBUNE HE will reduce the outlet pressure available by 0.1 bar for every 1m of height difference. The unit should be protected from frost. Particular care is needed if sitting in a garage or outbuilding. All exposed pipework should be insulated. TRIBUNE HE must be installed VERTICALLY on a flat base capable of supporting the weight of the cylinder when full. See technical specification section (page 24-25) for weights. The minimum recommended cupboard size is 650mm square. Pre-plumb models would benifit from an additional 100mm for cupboard depth.

Access for maintenance of the valves should be considered. Consideration should be given to position of discharge pipes (tundish), drain valves - shall be positioned away from electrical components.

The immersion heaters are 375mm long and care should be taken to ensure that they can be withdrawn for servicing if required. The discharge pipework from the safety valves should fall continuously and terminate safely.

SCHEMATIC DIAGRAM

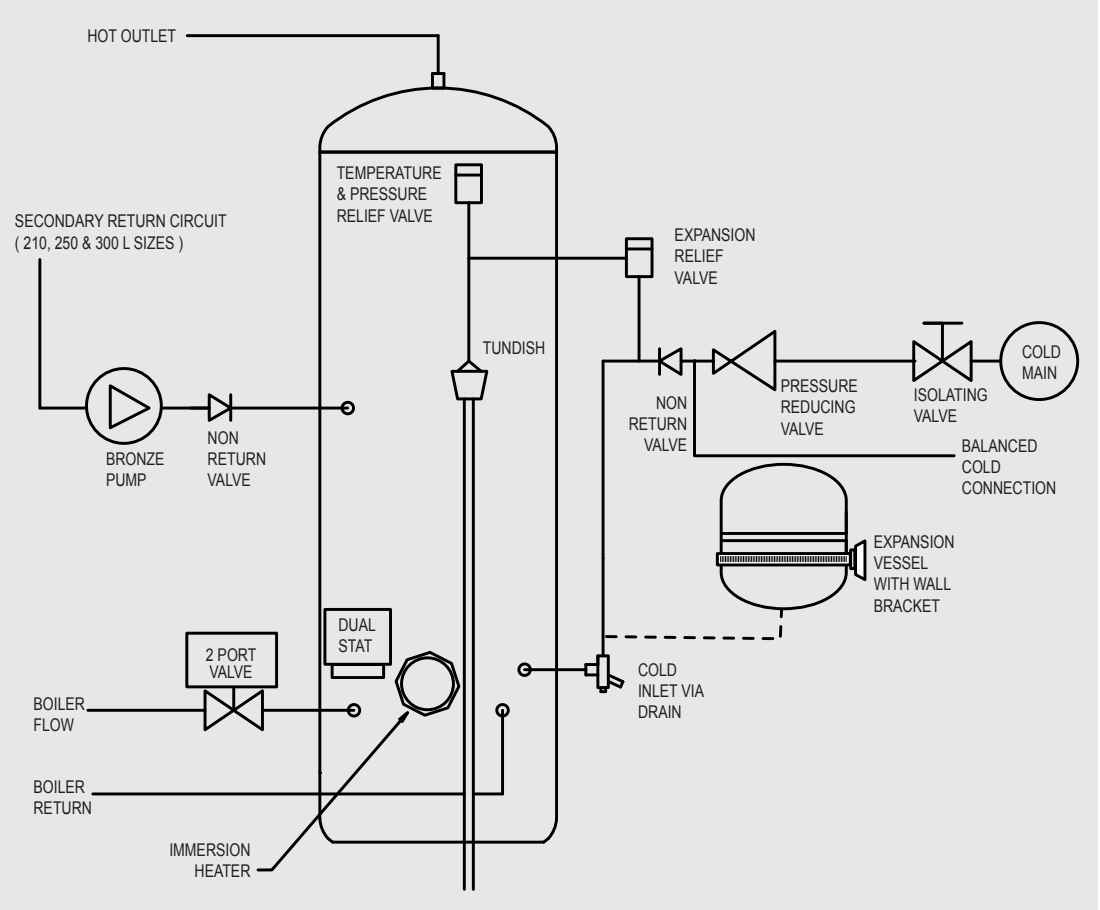

NOTES:
The pressure reducing valve, non-return valve and expansion relief valve are combined together in the inlet control set.

On 60 – 180 litre sizes there is no dedicated secondary return boss and the secondary return circuit should be tee’d into the cold feed pipe just above the drain elbow using a swept tee.

GENERAL INSTALLATION

COLD MAINS PIPEWORK

Run the cold main through the building to the place where the TRIBUNE HE is to be installed. Take care not to run the cold pipe near hot water or heating pipework so that the heat pick-up is minimized. Identify the cold water supply pipe and fit an isolating valve (not supplied).

A 22mm BS1010 stopcock can typically be used but a 22mm quarter turn full bore valve would be better as it does not restrict the flow as much. Do not use "screwdriver slot" or similar valves. Make the connection to the cold feed of the cylinder and incorporate a drain valve. Position the drain valve no higher than the cold inlet to ensure sufficient draining of cylinder when required. Position the inlet control just ABOVE the Temperature & Pressure Relief Valve (TPRV) mounted on the side of the cylinder. This ensures that the cylinder does not have to be drained down in order to service the inlet control set. Ensure that the arrow points in the direction of the water flow. Select a suitable position for the expansion vessel. Mount it to the wall using the bracket attached to the vessel. Use suitable fittings capable of supporting full vessel weight (and with appropriate consideration to wall material). Connect the expansion vessel to the cold feed pipework between the inlet control set and the cold inlet on the cylinder. Ensure that the top of the vessel is accessible for servicing.

(expansion vessel not to scale)

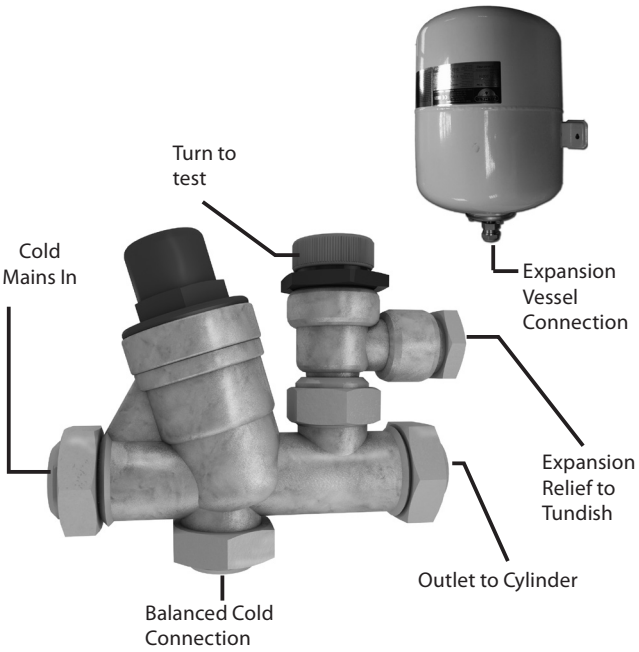

CONNECTING TO THE CYLINDER

All of the pipework connections on the cylinder are 22mm compression and supplied complete with gland nuts and olives, in the Accessory Kit box. Only connect 22mm Table X copper tube to these connections.

Cut the tube with a pipe cutter and ensure no sharp edges or burrs protrude. Slide both gland nut and olive onto the tube and push tube fully home into the connection, ensuring the tube end fully bottoms on the connection recess. Smear the outer wall of the olive with plumbing paste and tighten gland nut to form a water tight seal. Upon filling/commissioning, ensure all connections are completely watertight. Note: No control or isolation valve should be fitted between the expansion relief valve and the storage cylinder. The relief valve connections should not be used for any other purpose.

BALANCED COLD CONNECTION

If there are to be showers, bidets or monobloc taps in the installation then a balanced cold supply is necessary. There is a 22mm balanced connection on the inlet set.

HOT WATER PIPEWORK

Run the first part of the hot water distribution pipework in 22mm. This can be reduced to 15mm and 10mm as appropriate for the type of tap etc. Your aim should be to reduce the volume of the hot draw-off pipework to a practical minimum so that the time taken for the hot water is as quick as possible. Where monobloc mixing taps and showers are used, these should be installed to comply with the Water Supply (Water Fittings) Regulations 1999. If these devices are supplied with un-balanced supplies there should be single check valves installed at both inlets, to stop over pressurising of either supply.

PRIMARY COIL CONNECTIONS FOR INDIRECT UNITS

For Solar input models refer to pages 12-13 before making any connections.

Connect the primary connections (Indirect only) using the compression connections provided. The primary circuit must be positively pumped. Gravity circulation is not suitable. Either primary connection may be used as the primary flow, reheat times are not effected. The primary circuit can be open vented or sealed, with up to a maximum pressure of 3.5 bar. If you seal the primary circuit an additional expansion vessel and safety valve is required. The boiler may be Gas, Electric or Oil but must be under effective thermostatic control. Uncontrolled heat sources such as some AGA's, back boilers, solid fuel stoves, etc. are NOT SUITABLE. Please contact our Technical department for guidance. Connect the two port zone valve (indirect only) into the primary flow pipework. The direction of flow arrow should be towards the primary flow connection.

SECONDARY CIRCULATION

TRIBUNE HE can be used with secondary circulation. An appropriate WRAS approved bronze or stainless steel circulator should be used in conjunction with a non-return valve to prevent backflow. On large secondary circulation systems it may be necessary to incorporate an extra expansion vessel into the circuit to accommodate the increased system water volume. Secondary circulation should be avoided on Direct electrically heated units being used on off-peak electricity tariffs.

A secondary return boss is fitted as standard on 210, 250 & 300 ltr units. On smaller sizes, tee into the cold feed pipe above the drain using swept tee.

TRANSPORTATION

The TRIBUNE HE should be carried upright where possible. Assessements of risks for carrying the cylinder should be conducted. Use more than 1 person for carrying where appropriate. Always follow latest guide lines for lifting techniques, to avoid injury and damage to the product.

IMMERSION HEATERS

Only immersion heaters with a thermal cut-out may be used. To help ensure this, the immersion heaters have a special 1¾" thread. They are rated at 3kW at 240V and are of a low noise Incoloy construction.

They have both a thermostat and a high limit cutout. Please order the correct replacement via ourselves; fitting non-approved immersions may affect your guarantee. When fitting, ensure the 'O' ring is positioned correctly on the head of the immersion heater and lubricate before fitting. Fit it by hand until almost home then tighten gently as the 'O' rings will seal easily. The electrical supply to each immersion heater must be fused at 13A via a double pole isolating switch to BS 3456. The cable must be 2.5mm2 heat resistant (85°C HOFR) sheathed flex complying to BS 6141:1981 Table 8. Do not operate the immersion heater/s until the unit is full of water. Do not operate the immersion heater/s if any sterilisation liquid is in the cylinder as this will cause premature failure.

ELECTRICAL CONNECTIONS

Complete the wiring – use the appropriate wiring diagrams on page 14 - 18.

DISCHARGE ARRANGEMENT

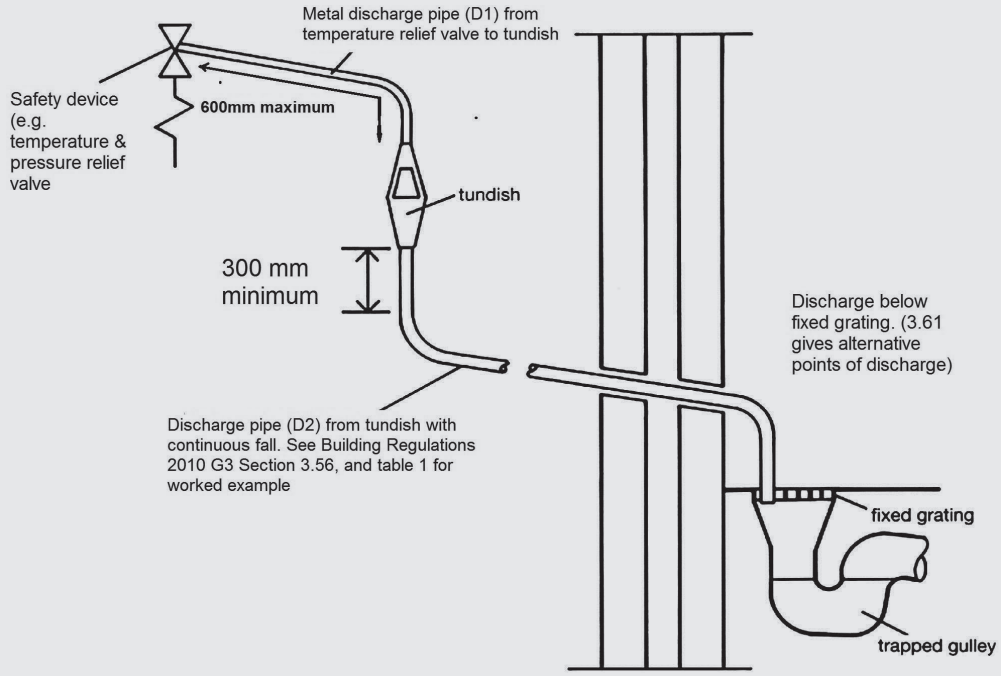

Diagram of a typical discharge pipe arrangement (extract from Building Regulation G3)

Note: The discharge may consist of scalding water and steam. Asphalt, roofing felt and non-metallic rainwater goods may be damaged by such discharges.

Note: D2 pipe from tundish is now allowed to be installed in soil stacks within premises. This activity is not recommended by Kingspan as discharge from T&P may continue for long periods of time. It is the installer's responsibility to ensure the discharge pipework can support the discharge for prolonged periods.
If used follow guidance on mechanical seal without water trap given in G3 Building Regulations.
As discharge can be in excess of 90oC discharge into plastic pipework is also not recommended.

Position the inlet control group so that the discharge from both safety valves can be joined together via a 15mm Tee (see diagram above). Connect the Tundish and route the discharge pipe. The discharge pipework must be routed in accordance with Part G3 of schedule 1 of the Building Regulations. The information that follows is not exhaustive and if you are in doubt you should seek advice. The two safety valves will only discharge water under fault conditions. When operating normally water will not be discharged. The tundish should be vertical, located in the same space as the unvented hot water storage system and be fitted as close as possible to, and lower than, the safety device, with no more than 600mm of pipe between the valve outlet and the tundish. The tundish should be positioned away from electrical devices.

Any Discharge should be visible at the tundish. The tundish should be located such that any discharge is visible. In addition, where discharges from safety devices may not be apparent, e.g. people with impaired vision or mobility, consideration should be given to the installation of a suitable safety device to warn when discharge takes place, e.g. electronically operated.

The discharge pipe (D2) from the tundish should:

A) Have a vertical section of pipe at least 300mm long, below the tundish before any elbows or bends in the pipework.

B) Be installed with a continuous fall of at least 1 in 200 thereafter.

The discharge pipe (D2) from the tundish should be of metal or other materials that have been demonstrated to be capable of withstanding temperatures of the water discharged.

The discharge pipe (D2) should be at least one pipe size larger than the nominal outlet size of the safety device unless its total equivalent hydraulic resistance exceeds that of a straight pipe 9m long i.e. discharge pipes between 9m and 18m equivalent resistance length should be at least two sizes larger than the nominal outlet size of the safety device, between 18 and 27m at least 3 sizes larger, and so on. Bends must be taken into account in calculating the flow resistance. Refer to diagram 1, Table 1 and the worked example. An alternative approach for sizing discharge pipes would be to follow BS6700 Specification for design installation, testing and maintenance of services supplying water for domestic use within buildings and their curtilages.

The discharge pipe (D2) should terminate in a safe place where there is no risk to persons in the vicinity of the discharge. Examples of acceptable discharge arrangements are:

a. To a trapped gully with the end of the pipe below the fixed grating and above the water seal.

b. Downward discharges at a low level; i.e. up to 100mm above external surfaces such as car parks, hard standings, grassed areas etc. are acceptable providing that where children play or otherwise come into contact with discharges, a wire cage or similar guard is positioned to prevent contact whilst maintaining visibility.

c. Discharges at a high level; e.g. in to metal hopper and metal down pipe with the end of the discharge pipe clearly visible or onto a roof capable of withstanding high temperature discharges of water and 3m from any plastic guttering systems that would collect such discharges.

d. Device to warn when discharge takes place.

WORKED EXAMPLE

The example below is for G1/2 temperature relief valve with a discharge pipe (D2) having 4 No. elbows and length of 7m from the tundish to the point of discharge.

From Table 1:

Maximum resistance allowed for a straight length of 22mm copper discharge pipe (D2) from a G1/2 temperature relief valve is: 9.0m. Subtract the resistance for 4 No. 22mm elbows at 0.8m each = 3.2m. Therefore the maximum permitted length equates to: 5.8m. 5.8m is less than the actual length of 7m therefore calculate the next largest size. Maximum resistance allowed for a straight length of 28mm pipe (D2) from a G1/2 temperature relief valve equates to: 14m. As the actual length is 7m, a 28mm (D2) copper pipe will be satisfactory.

TABLE 1

Sizing of copper discharge pipe 'D2' for a temperature relief valve with a G1/2 outlet size (as supplied).

Size of discharge pipework	Maximum length of straight pipe (no bends or elbows)	Deduct the figure below from the maximum length for each bend or elbow in the discharge pipe
22mm	Up to 9m	0.8m
28mm	Up to 18m	1m
35mm	Up to 27m	1.4m

TECHNICAL SPECIFICATIONS

TRIBUNE HE SLIMLINE DIRECT

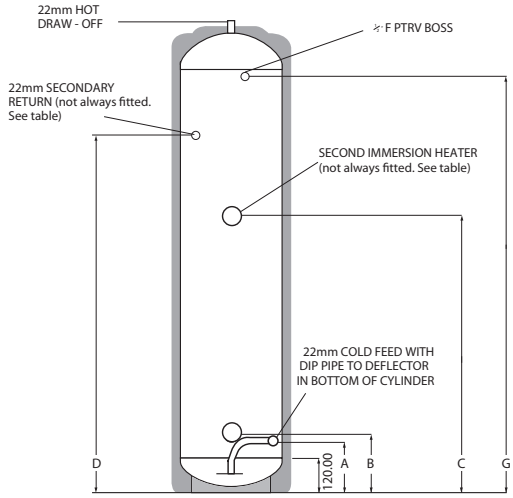

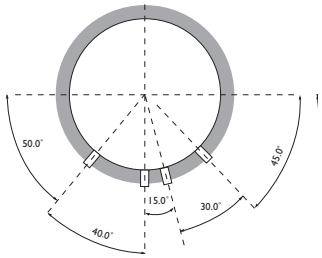

CODE	HEIGHT	DIAMETER	A	B	C	D	G
TDS60	673	478	175	210	N/F	N/F	483
TDS90	1048	478	175	210	610	N/F	858
TDS120	1236	478	175	210	710	N/F	1046
TDS150	1424	478	175	210	810	N/F	1234
TDS180	1674	478	175	210	910	N/F	1484
TDS210	1987	478	175	210	1100	1500	1797

TRIBUNE HE SLIMLINE INDIRECT

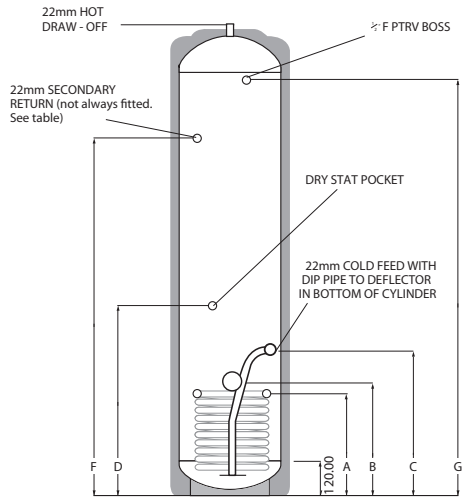

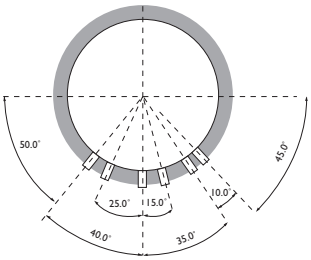

CODE	HEIGHT	DIAMETER	A	B	C	D	F	G
TIS60	673	478	340	380	440	395	N/F	483
TIS90	1048	478	340	380	440	395	N/F	858
TIS120	1236	478	340	380	440	395	N/F	1046
TIS150	1424	478	380	420	520	520	N/F	1234
TIS180	1674	478	380	420	520	610	N/F	1484
TIS210	1987	478	380	420	520	710	1500	1797

TECHNICAL SPECIFICATIONS

TRIBUNE HE DIRECT

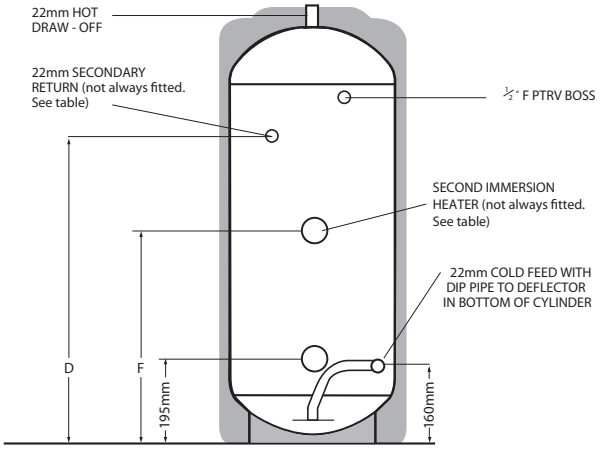

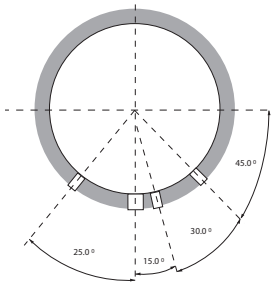

CODE	HEIGHT	DIAMETER	D	F
TD90	718	550	N/F	N/F
TD120	906	550	N/F	510
TD150	1093	550	N/F	610
TD180	1281	550	N/F	710
TD210	1469	550	1000	810
TD250	1719	550	1250	950
TD300	2032	550	1500	1100

TRIBUNE HE INDIRECT

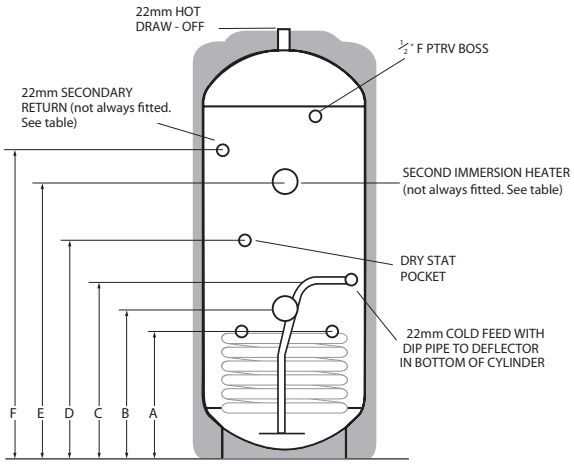

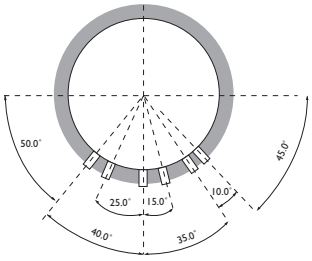

CODE	HEIGHT	DIAMETER	A	B	C	D	E	F
TI90	718	550	290	330	390	345	N/F	N/F
TI120	906	550	290	330	390	345	N/F	N/F
TI150	1093	550	330	370	465	385	N/F	N/F
TI180	1281	550	330	370	465	385	N/F	N/F
TI210	1469	550	365	405	465	465	N/F	1150
TI250	1719	550	365	405	465	560	950	1400
TI300	2032	550	365	405	465	660	1100	1600

All Dimensions are in mm and are of the cased unit.
N/F = not fitted.

TECHNICAL SPECIFICATIONS

TRIBUNE HE ECOCYL DIRECT

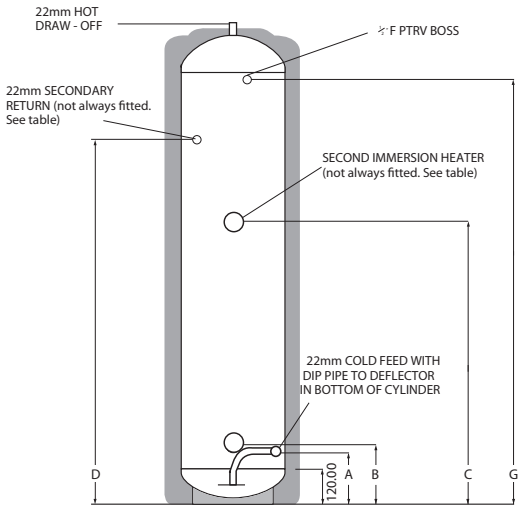

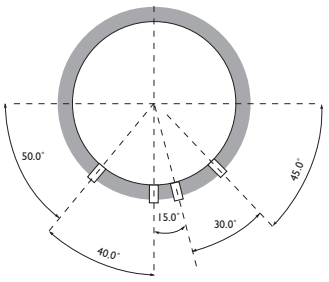

CODE	HEIGHT	DIAMETER	A	B	C	D	G
TDS60ECO	718	550	175	210	N/F	N/F	483
TDS90ECO	1093	550	175	210	610	N/F	858
TDS120ECO	1281	550	175	210	710	N/F	1046
TDS150ECO	1469	550	175	210	810	N/F	1234
TDS180ECO	1719	550	175	210	910	N/F	1484
TDS210ECO	2032	550	175	210	1110	1500	1797

All Dimensions are in mm and are of the cased unit.
N/F = not fitted.

TRIBUNE HE ECOCYL INDIRECT

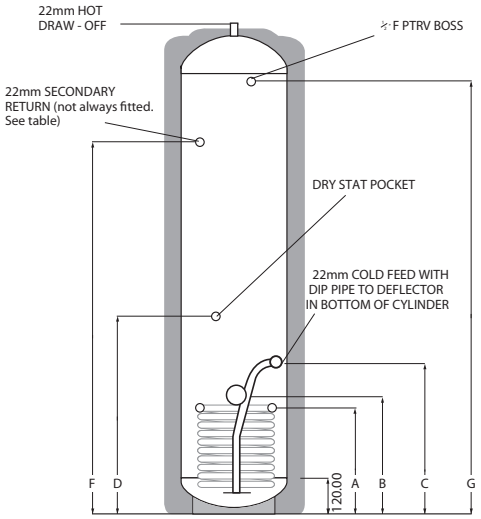

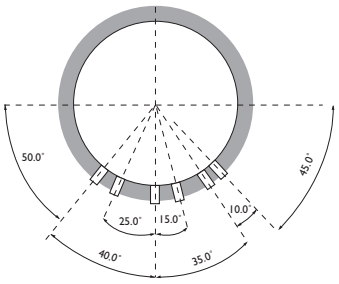

CODE	HEIGHT	DIAMETER	A	B	C	D	F	G
TIS60ECO	718	550	340	380	440	395	N/F	483
TIS90ECO	1093	550	340	380	440	395	N/F	858
TIS120ECO	1281	550	340	380	440	395	N/F	1046
TIS150ECO	1469	550	380	420	520	520	N/F	1234
TIS180ECO	1719	550	380	420	520	610	N/F	1484
TIS210ECO	2032	550	380	420	520	710	1500	1797

TECHNICAL SPECIFICATIONS

TRIBUNE HE SOLAR DIRECT

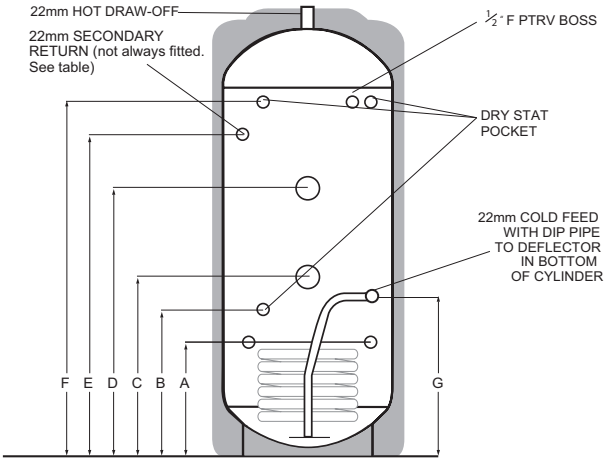

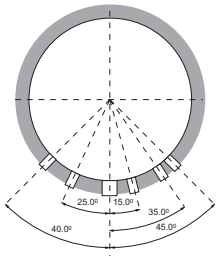

CODE	HEIGHT	DIAMETER	A	B	C	D	E	F	G
TSS150	1093	550	290	345	390	610	N/F	892	390
TSS180	1281	550	290	345	445	710	N/F	1080	390
TSS210	1469	550	365	420	500	810	1150	1268	465
TSS250	1719	550	365	420	670	1045	1400	1519	465
TSS300	2032	550	365	420	670	1100	1600	1831	465

TRIBUNE HE SOLAR INDIRECT

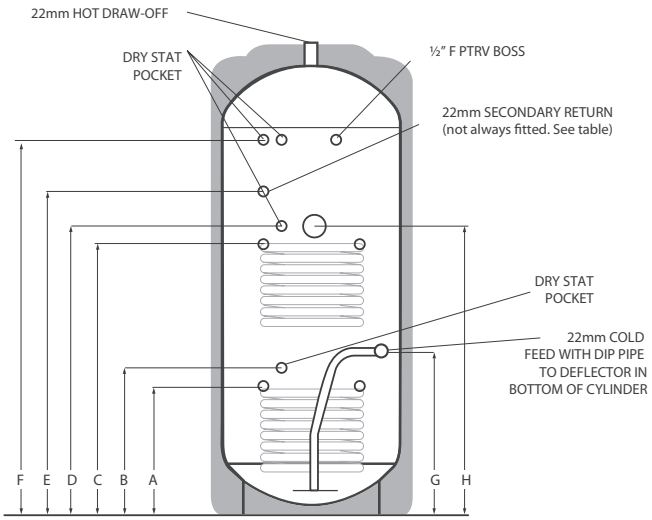

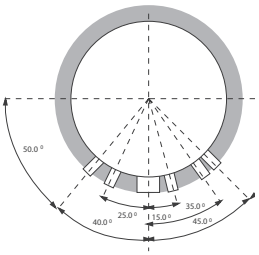

CODE	HEIGHT	DIAMETER	A	B	C	D	E	F	G	H
TT150	1093	550	290	345	642	697	N/F	892	390	693
TT180	1281	550	290	345	674	729	N/F	1080	390	725
TT210	1469	550	365	420	779	834	1150	1268	465	830
TT250	1719	550	365	420	950	1005	1400	1518	465	1000
TT300	2032	550	365	420	979	1034	1600	1832	465	1030

All Dimensions are in mm and are of the cased unit.
N/F = not fitted.

TRIBUNE HE SOLAR INSTALLATION

DIRECT SINGLE COIL CYLINDER

Detail for the installation of a Solar Unvented Direct cylinder.

GENERAL
When installing this product it is essential the overall installation meets all current legislation including, in particular, the high limit isolation requirements of Building Regulation G3. This document is designed to assist in achieving that aim.

WATER
The potable water connection and tundish discharge connection are to be connected in exactly the manner described in Pages 6 to 8 of this manual.

IMMERSION HEATERS
The standard issue immersion heaters are designed for domestic usage where the lower heater is connected to a low rate off-peak tariff and the upper heater used for occasional top-up purposes. Heaters of this nature are not designed to be permanently live. Connect in accordance with instructions on page 6.

SOLAR CONNECTIONS
The flow and return from the solar heat source are to be connected to the indirect coil. Either primary coil connection may be utilised as the flow or return. The solar primary circuit must have its own dedicated circulating pump, thermal and safety controls which must be installed as per the solar manufacturers instructions. The solar control system used must be of the solar differential control type and should be connected to the solar sensor.
The solar sensor, supplied as part of the solar controls should be inserts into Pocket B and is held in-situ with the black sensor pocket retaining bung provided.
It is necessary to connect the solar pump via the over-temperature high limit cut-out (provided) to ensure the heat input to the solar coil is interupted if the cylinder over heats. Some method to prevent thermosyphoning must also be employed. Non-return check valves in the primary flow and return pipework would be acceptable.
If solar controls do not offer appropriate isolation a 2 port zone valve (not supplied) can be used with the pump and high limit stat as shown on page 14.

INDIRECT TWIN COIL CYLINDER

UPPER COIL
The upper coil is connected to the fossil fuel boiler as per the instructions for the TRIBUNE HE Unvented Indirect single coil model with the dual stat control and high limit thermostat inserted into pocket D (lower diagram page 12). The wiring requirements are as depicted on page 14.

LOWER COIL: SOLAR INSTALLATION
The flow and return from the solar heat source are to be connected to the indirect coil. Either primary coil connection may be utilised as the flow or return. The solar primary circuit must have its own dedicated circulating pump, thermal and safety controls which must be installed as per the solar manufacturers instructions. The solar control system used must be of the solar differential control type and should be connected to the solar sensor.
The solar sensor, supplied as part of the solar controls should be inserts into Pocket B and is held in-situ with the black sensor pocket retaining bung provided.
It is necessary to connect the solar pump via the over-temperature high limit cut-out (provided) to ensure the heat input to the solar coil is interrupted if the cylinder overheats. Some method to prevent thermosyphoning must also be employed. Non-return check valves in the primary flow and return pipework would be acceptable. If solar controls do not offer appropriate isolation a 2 port zone valve (not supplied) can be used with the pump and high limit stat as shown on page 14.

NOTE: If it is intended to fit a cylinder with a solar coil to be used at a later date, the 2 coils should be connected in series to make use of the solar coil, using the dual stat in Pocket D

The Domestic Heating Compliance Guide document L1A and L1B provides excellent advice in sizing both cylinder designated solar areas and heat exchangers to the surface area of the solar collectors. Using this guide Range are able to offer sizing advice for specification.

NB: The total detail of compliance guide document should be consulted prior to specifying product or commencing design.

SOLAR HIGH LIMIT CONTROL

TYPICAL SCHEMATIC WIRING DIAGRAMS

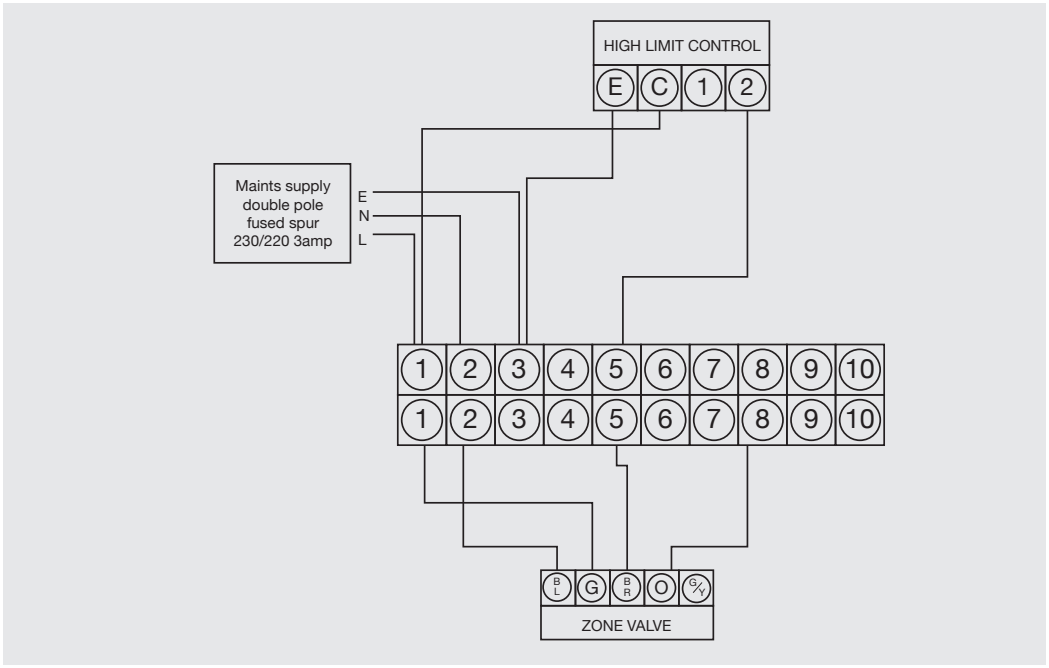

These schematic wiring diagrams depict an IMIT high limit control stat and the connections are numbered accordingly. Where an alternative is supplied connect as per manufacturer's instructions.

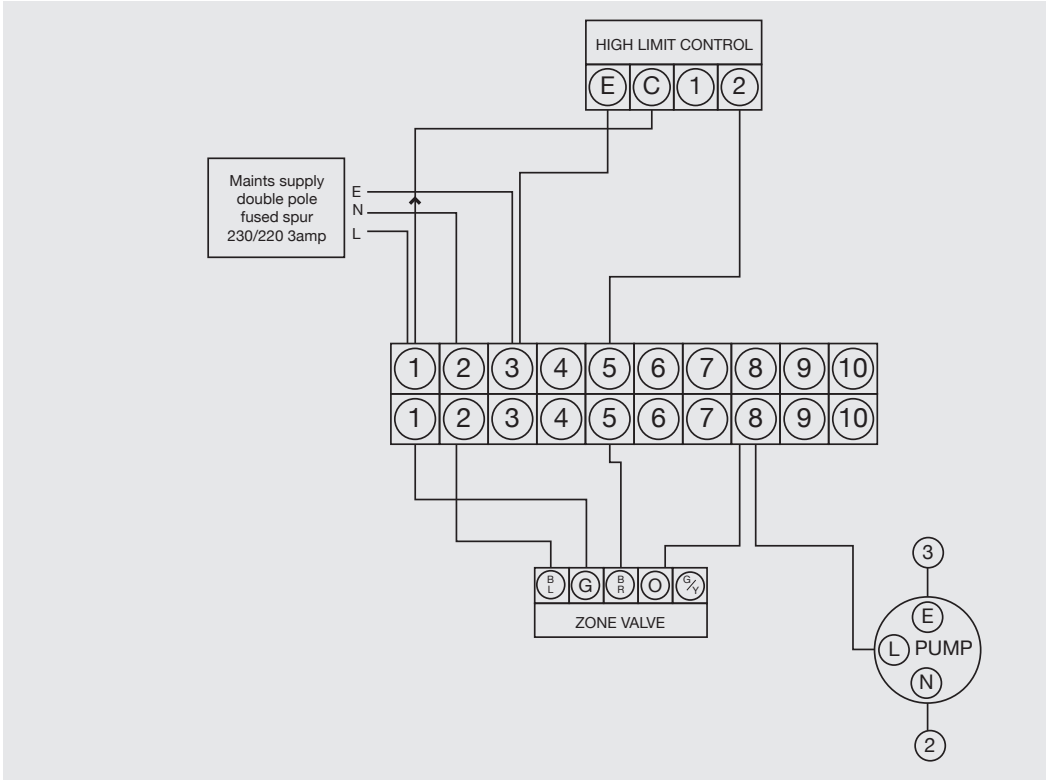

TYPICAL SCHEMATIC WIRING DIAGRAMS

The diagrams shown relate to the components listed. Other components and other manufacturers' components may vary in their wiring requirements, particularly thermostats. Always refer to manufacturers' instructions which may override the detail in order to function correctly.

VARIANT DUAL THERMOSTAT WIRING

WIRING DIAGRAM 2 x TWO PORT ZONE VALVES (S-PLAN)

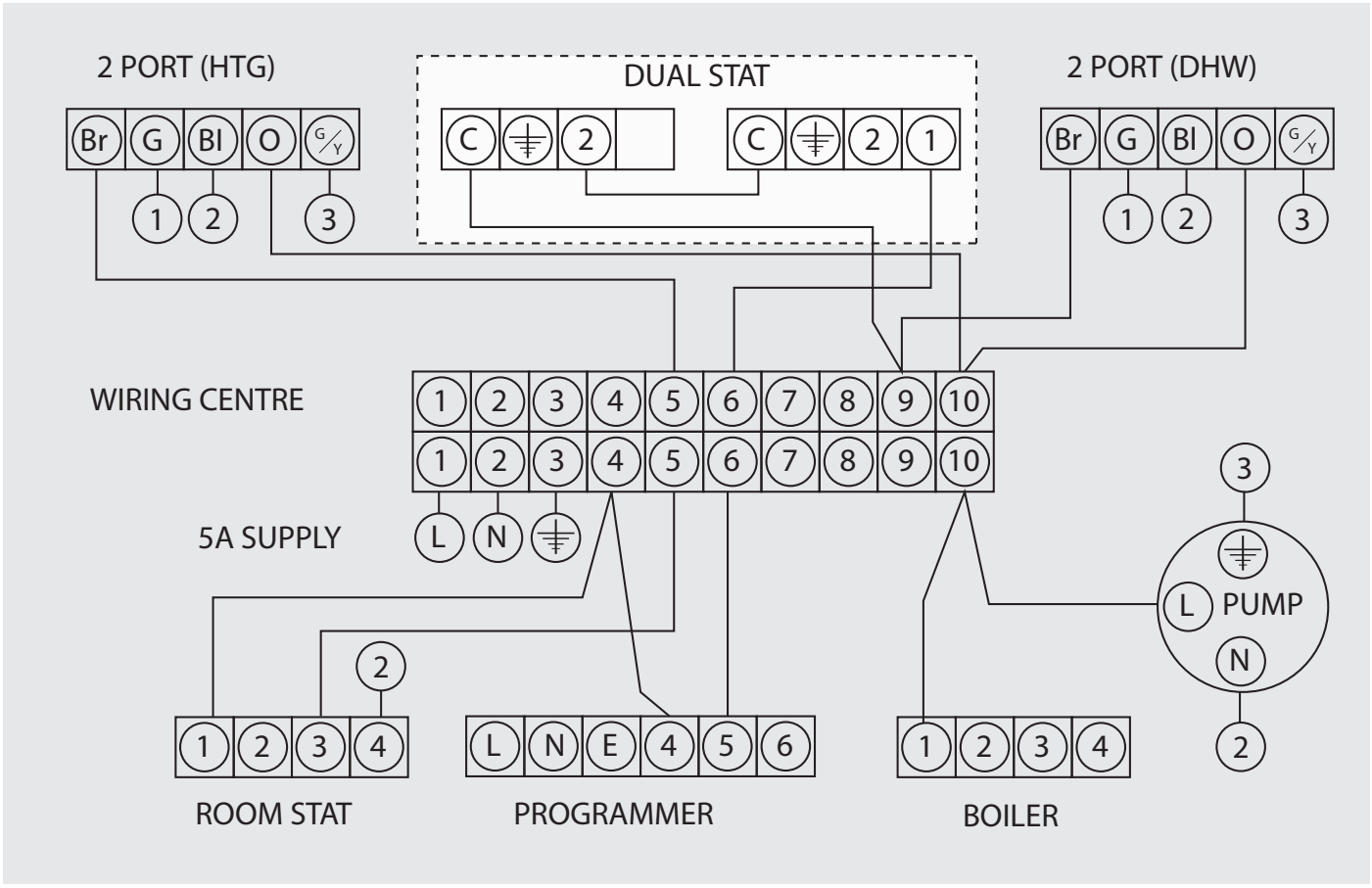

TYPICAL SCHEMATIC WIRING DIAGRAMS

WIRING DIAGRAM THREE PORT MID POSITION VALVE (Y-PLAN) +
TWO PORT VALVE

VARIANT DUAL THERMOSTAT WIRING
WIRING DIAGRAM 3 PORT MID POSITION (Y-PLAN) +2 PORT VALVE

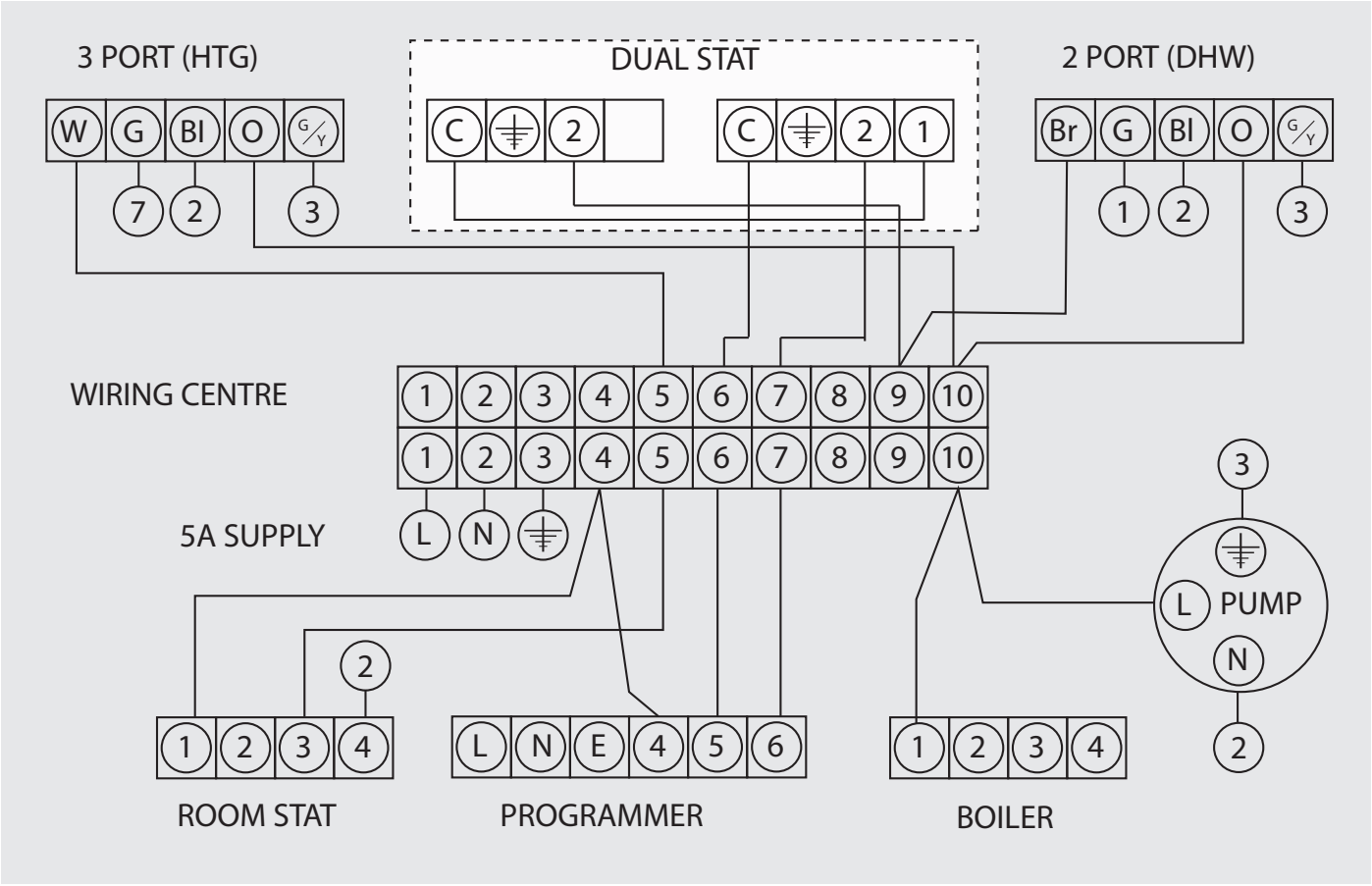

TYPICAL SCHEMATIC WIRING DIAGRAMS PRE-PLUMBED CYLINDER

SINGLE ZONE HEATING

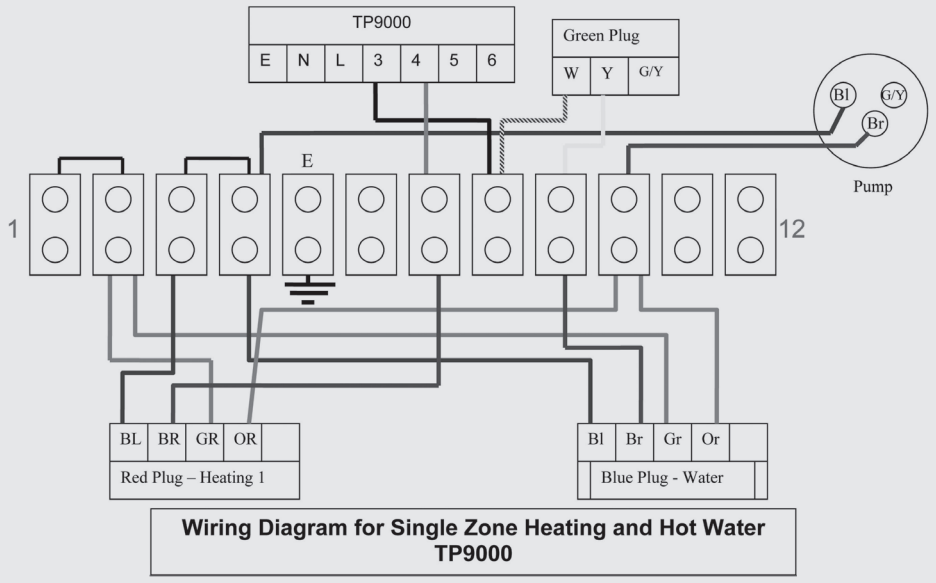

Wiring Diagram for Single Zone Heating and Hot Water TP9000

Connect power supply as per instruction manual. TP9000 terminals 5 & 6 can be used for remote sensor connection.

TWIN ZONE HEATING

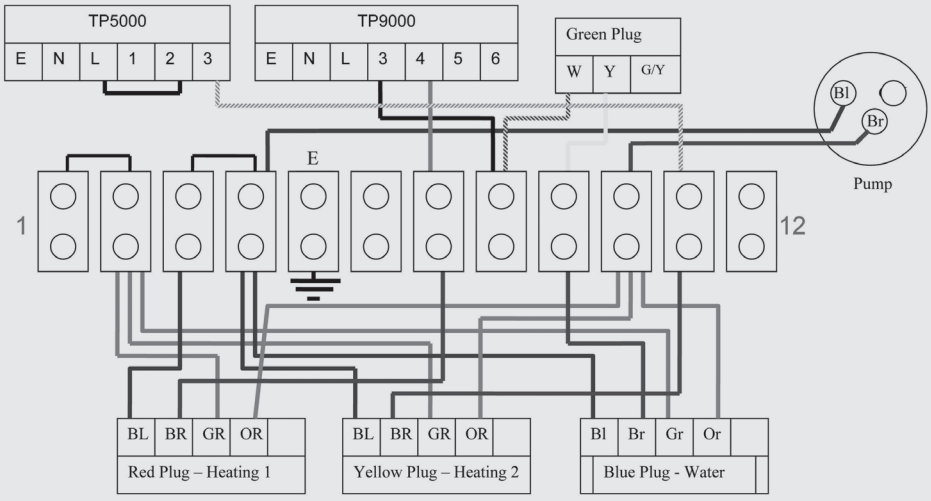

Wiring Diagram for Twin Zone Heating and Hot Water TP9000 + TP5000

Connect power supply as per instruction manual. TP9000 terminals 5 & 6 can be used for remote sensor connection.

CONNECTED TO BOILER WITH PUMP OVER-RUN FACILITY

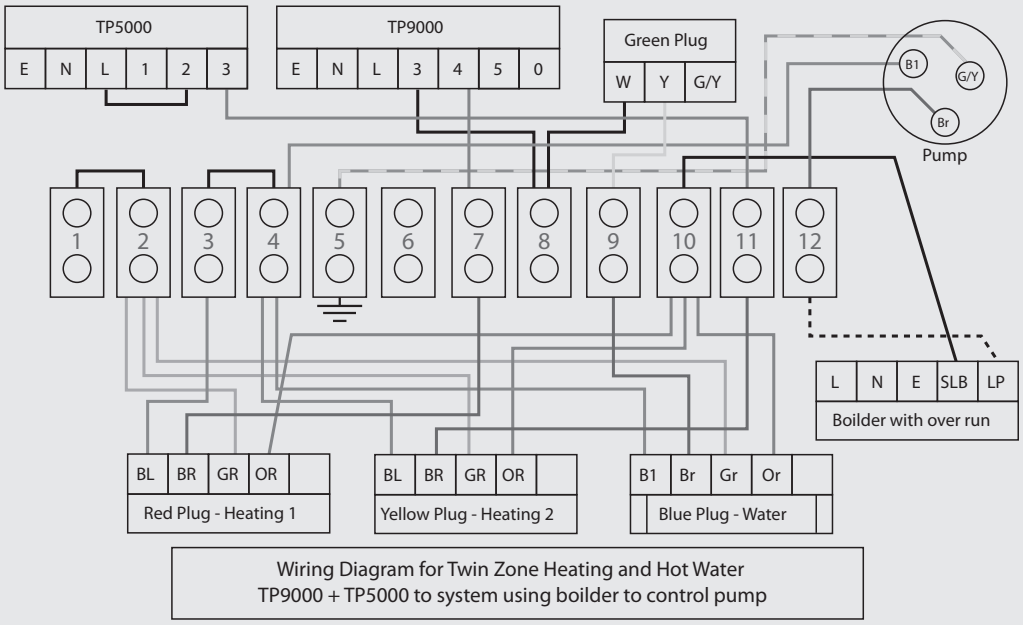

Wiring Diagram for Twin Zone Heating and Hot Water
TP9000 + TP5000 to system using boilder to control pump

INSTRUCTION FOR CONNECTION TO A BOILER WITH PUMP OVER RUN FACILITY SUCH AS IDEAL LOGIC HEAT

1.Disconnect brown pre-wire pump flex from position 10

2.Reconnect brown pre-wire pump flex to position 12

3.Connect 5 core cable between boiler and wiring control centre to following positions

WIRING CENTRE	BOILER	
TERMINAL 1	PERMANENT LIVE	L
TERMINAL 3	PERMANENT NEUTRAL	N
TERMINAL 5	PERMANENT EARTH	E
TERMINAL 10	SWITCHED LIVE TO BOILER	SL B
TERMINAL 12	SWITCH LIVE TO PUMP	L P

PRE-PLUMBED

CYLINDER INSTALLATION

COLD MAINS PIPEWORK

Run the cold main through the building to the place where the TRIBUNE HE PRE-PLUMB unit is to be installed. Take care not to run the cold pipe near hot water or heating pipework so that the heat pick-up is minimized. Identify the cold water supply pipe and fit an isolating valve (not supplied). A 22mm BS1010 stopcock can typically be used but a 22mm quarter turn full bore valve would be better as it does not restrict the flow as much. Do not use "screwdriver slot" or similar valves. Make the connection to the inlet control set (Position 2). Ensure that the arrow points in the direction of the water flow. Select a suitable position for the expansion vessel. Mount it to the wall using the bracket provided. Connect the expansion vessel to the cold feed pipework between the inlet control set and the cold inlet. Ensure that the top of the vessel is accessible for servicing.

CONNECTING TO THE CYLINDER

All of the pipework connections on the cylinder are 22mm compression and supplied complete with gland nuts and olives, in the Accessory Kit box. Only connect 22mm Table X copper tube to these connections. Cut the tube with a pipe cutter and ensure no sharp edges or burrs protrude. Slide both gland nut and olive onto the tube and push tube fully home into the connection, ensuring the tube end fully bottoms on the connection recess. Smear the outer wall of the olive with plumbing paste and tighten gland nut in the prescribed manner. Upon filling/commissioning, ensure all connections are completely watertight.

BALANCED COLD CONNECTION

If there are to be showers, bidets or monobloc taps in the installation then a balanced cold supply is necessary. There is a 22mm balanced connection on the inlet set.

HOT WATER PIPEWORK

Connect to HWDO (Position 1 on diagram). Run the first part of the hot water distribution pipework in 22mm. This can be reduced to 15mm and 10mm as appropriate for the type of tap etc. Your aim should be to reduce the volume of the hot draw-off pipework to a practical minimum so that the time taken for the hot water is as quick as possible. Where monobloc mixing taps and showers are used, these should be installed to comply with the Water Supply (Water Fittings) Regulations 1999. If these devices are supplied with un-balanced supplies there should be single check valves installed at both inlets, to stop over pressurising of either supply.

CONNECTIONS FOR INDIRECT UNITS

Connect to the boiler flow and return (Positions 19 & 14) lines. An additional expansion vessel and safety valve is supplied. The boiler may be Gas, Electric or Oil but must be under effective thermostatic control. Uncontrolled heat sources such as some AGA's, back boilers, solid fuel stoves, etc. are NOT SUITABLE. Please contact our Technical department for guidance. Connect to (Position 9 & 14) for the radiator circuits. Twin zone heating unit are supplied with 2 port zone valves in positions 9a and 9b.

CONNECTIONS FOR SOLAR COILS

Connect to the solar coil as detailed on page 13 ensure the solar pump is connected via the over temperature cut out as described on page13.

SECONDARY CIRCULATION

TRIBUNE HE can be used with secondary circulation. An appropriate WRAS approved bronze or stainless steel circulator should be used in conjunction with a non-return valve to prevent backflow. On large secondary circulation systems it may be necessary to incorporate an extra expansion vessel into the circuit to accommodate the increased system water volume. A secondary return boss is fitted as standard on 210, 250 & 300 ltr units (Position 17). On smaller sizes, tee into the cold feed pipe above the drain using a swept tee.

IMMERSION HEATERS

Only immersion heaters with a thermal cutout may be used. To help ensure this, the immersion heaters have a special 1¾" thread. They are rated at 3 kW at 240 V and are of a low noise Incoloy construction. They have both a thermostat and a high limit cutout. Please order the correct replacement via partshop; fitting non-approved immersions may affect your guarantee. When fitting, ensure the 'O' ring is positioned correctly on the head of the immersion heater and lubricate before fitting. Fit it by hand until almost home then tighten gently as the 'O' rings will seal easily. The electrical supply to each immersion heater must be fused at 13A via a double pole isolating switch to BS 3456. The cable must be 2.5mm2 heat resistant (85°C HOFR) sheathed flex complying to BS 6141:1981 Table 8. Do not operate the immersion heater/s until the unit is full of water. Do not operate the immersion heater/s if any sterilisation liquid is in the cylinder as this will cause premature failure.

ELECTRICAL CONNECTIONS

Complete the wiring – use the appropriate wiring diagrams on pages 17 & 18.

COMMISSIONING

Carry out commissioning as per instructions on page 21 and in line with boiler manufacturer's instructions for the heating and the primary circuit. Primary pipework must be filled, bled and tested in accordance with the boiler manufacturer's instructions, to avoid damage to the circulation pump.

INDIRECT PRE-PLUMBED

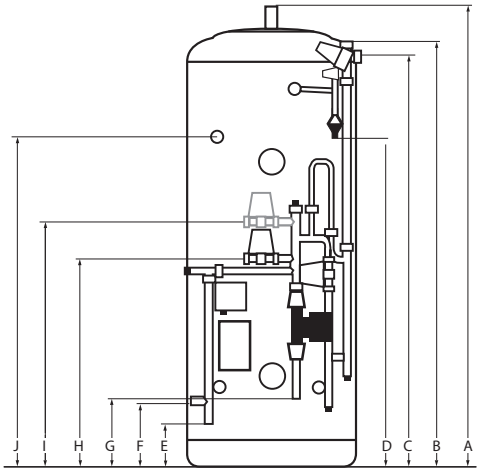

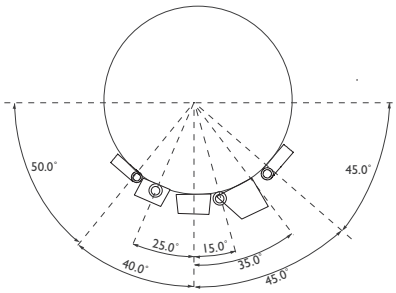

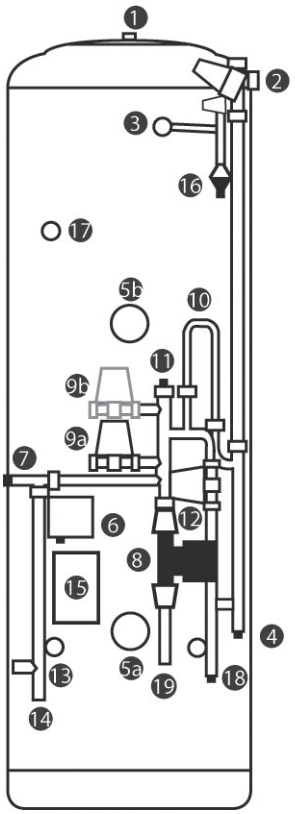

CODE	A	B	C	D	E	F	G	H	I	J
TI120P4	922	883	836	573	171	246	102	470	590	N/F
TI150P4	1109	1070	1023	760	211	286	140	508	628	N/F
TI180P4	1297	1258	1211	948	211	286	320	690	810	N/F
TI210P4	1485	1446	1399	1136	246	321	320	690	810	1150
TI250P4	1735	1696	1649	1386	246	321	320	690	810	1400
TI300P4	2048	2009	1962	1699	246	321	418	784	904	1600

For Twin Zone codes please replace P4 with PT4

SOLAR INDIRECT PRE-PLUMBED

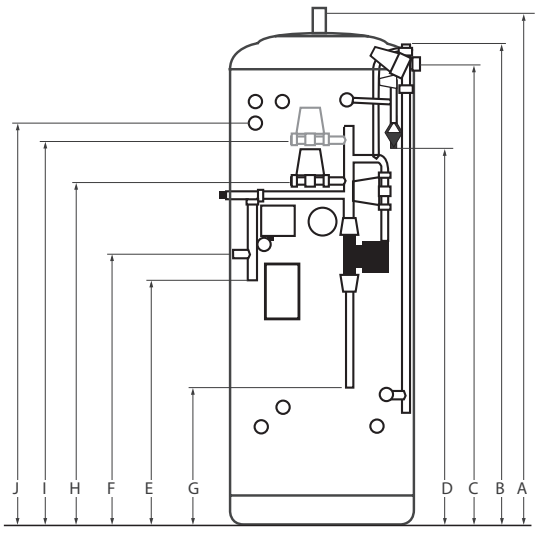

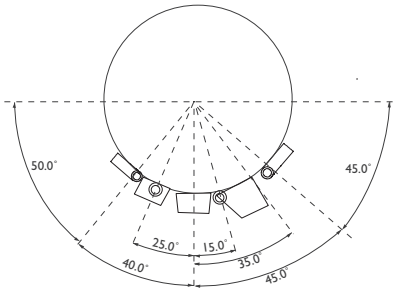

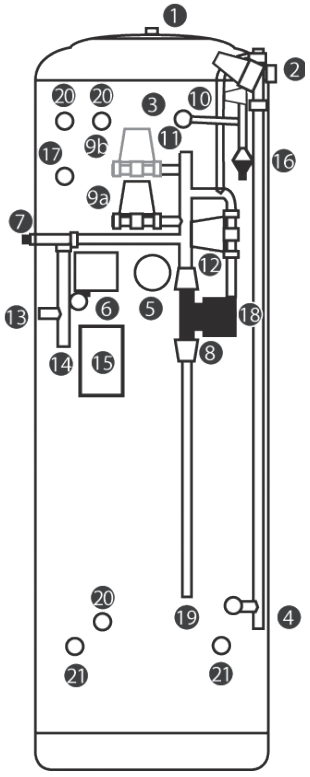

CODE	A	B	C	D	E	F	G	H	I	J
TT180P4	1297	1258	1211	948	560	635	480	850	970	N/F
TT210P4	1485	1446	1399	1136	665	740	585	955	1075	1150
TT250P4	1735	1696	1649	1386	830	905	770	1130	1250	1400
TT300P4	2048	2009	1962	1699	859	934	799	1159	1279	1600

For Twin Zone codes please replace P4 with PT4

All Dimensions are in mm and are of the cased unit.

N/F = not fitted.

COMMISSIONING

FLUSHING & FILLING

Check that the pressure in the expansion vessel is 3 bar (45PSI), i.e. the same as the setting of the pressure reducing valve. The valve is of the car tyre (Schrader) type. Check all the connections for tightness including any factory made connections such as the immersion heater and the temperature and pressure relief valve. Before filling, open the hot tap furthest away from the TRIBUNE HE to let air out. Open the cold main isolation valve and allow the unit to fill. When water flows from the tap allow it to run for a short while to flush through any dirt, swarf or flux residue. Close the tap and open every other hot tap in turn to purge all remaining air.

DIRECT UNITS

After filling with water and after sterilisation liquid has been purged, switch on the power to the immersion heaters and allow the unit to start to heat. The immersion heater is supplied preset at 55°C. Turning fully to + sets to approx 65°C. Allow unit to heat up, adjust the thermostat so that the heater switches off at 60°C. Record information on commissioning check list (Page 30).

INDIRECT UNITS

Consult the boiler manufacturer's commissioning instructions and fill the primary circuit. Ensure the lever on the two port valve is set to the filling position. When full, move the lever back. Switch the programmer to Domestic Hot Water (DHW) and allow the unit to start to heat. Adjust the dial of the dual thermostat to between 55°C and 65°C as required. Allow unit to heat up, adjust the thermostat so that the heater switches off at 60°C. Record information on commissioning check list (Page 30).

STORAGE TEMPERATURE

The recommended storage temperature for both direct and indirect cylinders is 60-65°C. In hard water areas consideration should be given to reducing this to 50-55°C. In many healthcare applications the guidance on Legionella control and safe water delivery temperatures will require storing the water at 60-65°C, distributing at 50- 55°C and using thermostatic mixing valves to control the final temperature. For details consult the NHS Estates Guidance on safe hot water temperatures.

SAFETY VALVE CHECKS

During heat-up there should have been no sign of water coming from either the expansion relief valve or the temperature/ pressure relief valve. Now hold both of these safety valves fully open, allowing as much water as possible to flow through the tundish. Check that your discharge pipework is free from debris and is carrying the water away to waste efficiently. Release the valves and check that they reseat properly. On Completion of commissioning, fill in the Benchmark check list and leave with the house owner.

BENCHMARK SCHEME

The installer must follow the Benchmark code of practice for the Benchmark certification to be valid. The benchmark code of practice can be found on the internet using the following internet site www.centralheating.co.uk and follow links.

SERVICING

GENERAL

Servicing should only be carried out by competent installers and any spare parts used must be purchased from Range Cylinders or merchants. NEVER bypass any safety devices or operate the unit without them being fully operational.

DRAINING

Isolate from the electrical supply to prevent the immersion heaters burning out. Turn off the boiler. Isolate the unit from the cold mains. Attach a hose to the draining tap ensuring that it reaches to a level below the unit (this will ensure an efficient syphon is set up and the maximum amount of water is drained from the unit). First open the hot tap closest to the unit and then open the draining tap.

WARNING: WATER DRAINED OFF MAY BE VERY HOT!

IMPORTANT: After draining the cylinder do not close the hot tap until the cylinder has fully cooled, failure to follow this instruction may result in damage to the cylinder and will invalidate the guarantee.

ANNUAL MAINTENANCE

TRIBUNE HE requires an annual service in order to ensure safe working and optimum performance and maintain the guarantee. It is essential that the following checks are performed by a competent installer on an annual basis. Commonly this is done at the same time as the annual boiler service.

1) Twist the cap of the expansion relief valve on the inlet control set and allow water to flow for 5 seconds. Release and make sure it resets correctly. Repeat with the pressure / temperature relief valve. In both cases check that the discharge pipework is carrying the water away adequately. If not, check for blockages etc. and clear.
WARNING: THE WATER DISCHARGED MAY BE VERY HOT!

2) Check that any immersion heaters fitted are working correctly and that they are controlling the water at a temperature between 55°C and 65°C.

3) Check the pressure in the expansion vessel is charged to 3 bar. Turn off the water supply to the unit and open a hot tap first. The air valve on expansion vessel is a Schrader (car tyre) type. Air, Nitrogen or CO2 may be used to charge the expansion vessel.

4) Unscrew the head on the inlet control set and clean the mesh filter within. (Some water may escape)

5) The Benchmark Service Record supplied (page 31) with this unit should be updated at each service.

YOUR GUARANTEE MAY BE VOID WITHOUT PROOF OF ANNUAL SERVICING.

FAULT FINDING

FAULT	POSSIBLE CAUSE	SOLUTION
Water escaping from the case	Compression fitting on hot - draw off not sealing	Check/remake joint with sealing paste
Cold water at Hot taps	Direct - immersion heater not switched on or cutout has triggered	Check / reset
	Indirect - boiler not working	Check boiler - consult boiler manufacturers' instructions
	Indirect - motorised valve fault	Check plumbing / wiring to motorised valve
	Indirect - cutout in dual stat has operated	Reset and investigate cause
Water discharges from expansion relief valve	If continual - pressure reducing valve (part of inlet control set) may not be operating correctly	Check outlet pressure from inlet control set is 3 bar.
	If continual - expansion relief valve seat may be damaged	Remove cartridge - check seat and renew if necessary
	If intermittent - expansion vessel charge may have reduced / bladder perished	Check pressure in expansion vessel. Recharge to 3 bar if necessary. If bladder perished replace vessel.
	Unit it being back pressurised	With cylinder cold check pressure in cylinder. If this is the same as the incoming mains pressure then you are getting backfeed. Install a balanced cold supply (see page 6)
Water discharges from temperature &. pressure relief valve	Unit has overheated - thermal controls have failed	"Switch off power to boiler and immersion heaters. Leave water supply on. Wait until discharge stops. Isolate water supply and replace if faulty"
Milky / cloudy water	Oxygenated water	Water from any pressurised system will release oxygen bubbles when flowing. The bubbles will settle out.
No hot water flow	Cold main off	Check and open stopcock
	Strainer blocked in pressure reducing valve	Isolate water supply and clean
	Inlet control set may be fitted incorrectly	Check and refit as required
Noise during hot water draw-off -typically worse in the morning.	Loose airing cupboard pipework	Install extra clips
Hot or warm water from cold tap	If tap runs cold after a minute or so the pipe is picking up heat from heating pipework.	Insulate / re-route

SPARE PARTS

A full range of spare parts is available from Kingspan spare Parts Website www.kepartshop.com

USER INSTRUCTIONS

Your stainless system is automatic in normal use and requires only annual servicing. You should employ a competent installer to perform the annual servicing. Normally this is timed to coincide with the annual boiler service.

IF WATER IS FLOWING FROM THE SAFETY VALVES THROUGH THE TUNDISH THIS INDICATES A FAULT CONDITION AND ACTION IS NEEDED.

If this water is hot, turn the boiler and / or the immersion heater off. Do not turn off the water until the discharge runs cool. The discharge may also stop.

CALL OUT A COMPETENT PLUMBER TO SERVICE THE UNIT.

Tell them you have a fault on an unvented cylinder. We stock all the spare parts they may need (see page 3).

DRAINING

IMPORTANT: After draining the cylinder do not close the hot tap until the cylinder has fully cooled, failure to follow this instruction may result in damage to the cylinder and will invalidate the guarantee.

The installer must follow the Benchmark code of practice for the Benchmark certification to be valid. Please see page 28 for further details.

GUARANTEE TERMS AND CONDITIONS

This guarantee applies only to products manufactured by Kingspan Environmental and its associated brands (hereafter the term 'product' refers to Range Tribune HE).

Kingspan Environmental guarantees to the homeowner that for a period of 2 years from the date of commissioning or legal completion if new build, that the products and associated components installed will - Conform to Kingspan Environmental specification; and be free from defects in materials and workmanship, subject to the conditions set out below.

Please note: this guarantee excludes all pipework and connections and excludes any ancillary equipment as may be connected to the product. (Ex: descaling equipment, water softeners)

The guarantee is extended to a total of 25 years for the stainless steel inner vessel in domestic properties.

This guarantee means that Kingspan Environmental will take responsibility for the cost of guarantee repair of a product by an approved Kingspan Environmental Service Engineer, so that the product shall conform to Kingspan Environmental specification.

Kingspan Environmental reserves the right, at it's discretion to replace a product or major component where it considers it to be beyond economical repair.

In the event of a breakdown during the guarantee period please call our Customer Service Department on:

0845 260 7260 - UK

Guarantee repair is free of charge to you for any parts and labour, providing all the guarantee conditions have been met.

GUARANTEE TERMS & CONDITIONS
Please read the following conditions before registering your product and before seeking any guarantee service support
IMPORTANT: Kingspan Environmental guarantee is subject to the home owner registering with the Kingspan Environmental Customer Service Department within 30 days of commissioning / occupation if new build to confirm:
• Product Make / Model
• Details installation (can be found in Benchmark Log Book left by installer)
Please complete the registration card provided and return to: Customer Service Department, Kingspan Environmental, Tadman Street, Wakefield, WF1 5QU, UK
or register the product on-line at www.kingspanhws.com/warranty.
If you do not register the Product then Kingspan Environmental Guarantee is limited to twelve months from the date of commissioning.
The product must be serviced by a competent person* within 12 months after commissioning, and thereafter at 12 monthly intervals. Kingspan Renewables reserves the right to seek evidence of this maintenance to our reasonable satisfaction before approving any guarantee servicing / repairs. This may include evidence of completed BenchmarkTM service record and service agreement / invoice.
Annual Services are available from the Customer Service/ Technical Support team.
*A competent person is a business that has been adjudged by an accredited body** to be sufficiently competent to self-certify that its work complies with Document (G) Part 3 of the Building Regulations of England and Wales
*May Include SEI registered installers and/or FAS trained plumbers who have completed the renewables technology module
** An example of which is BPEC
Any exchanged component will become the legal property of Kingspan Environmental.
This guarantee is valid provided that:
• The product has been installed by a competent installer and as per the instructions contained in the installation manual and all relevant Codes of Practice and Regulations in force at the time of installation.
• Any disinfection has been carried out in accordance with BS 6700.
• The product has not been modified in any way.
• The system is fed from domestic mains water supply complience with water regulations 2000
• The product has only been used for the storage of wholesome water (max. 250mg/l chloride – for hard water areas, Kingspan suggest the use of an electrolytic scale reducer)
• Any 3rd party labour charges associated with replacing the unit or any of its components have been authorised in advance by the Customer Service/ Technical Support team.
• It has only been used for the storage of potable water.
• The product has not been subjected to frost, nor has it been tampered with or been subjected to misuse or neglect.
• No factory fitted parts have been removed for unauthorised repair or replacement.
• The BenchmarkTM Commissioning Checklist and Service Record included with this product Installation Manual have been completed.
• Regular maintenance has been carried out by a competent person in accordance with the requirements set out in the maintenance section of the installation manual.
• The owner or installer has registered the product on-line at www.kingspanhws.com/warranty within 30 days of purchase. Failure to do so may result in a reduced warranty period.
• Evidence of purchase and date of supply must be submitted upon making a claim.
• Any replacement parts used should be authorised Kingspan Environmental spare parts.

GUARANTEE TERMS AND CONDITIONS

•If a defect arises and a valid claim is received within the Warranty Period, at its option and to the extent permitted by law Kingspan Environmental shall either
(1) Repair the defect at no charge, using new or refurbished replacement parts or
(2) Exchange the product with a product that is new or which has been manufactured using new or serviceable used parts or
(3) Refund the purchase price or a reasonable proportion of the purchase price.
Kingspan Environmental reserves the right to inspect the product at your home before proceeding with any guarantee repair or replacement.
Any valid guarantee claim or guarantee service does not extend the original guarantee period.
The guarantee only applies to the property at which the product was originally installed and applied only to properties in the United Kingdom & Ireland. The guarantee is fully transferable from a change of legal ownership of the property.
EXCLUSIONS – The guarantee does not cover:
Kingspan Environmental will not be liable for any fault or costs arising from incorrect installation, incorrect application, lack of regular maintenance or neglect, accidental damage, malicious damage, misuse, any alteration, tampering or repair carried by a non competent person.
• The product if the factory fitted temperature and pressure relief valve has been tampered with or removed.
• Neither the Distributor nor Manufacturer shall be responsible for any consequential damage howsoever caused.
• The effects of scale build up or the effects of corrosion.
• Any consequential losses caused by the
failure or malfunction of the product.
• Faults and any associated costs arising from lack of power or water.
• Failure incurred by water contamination, air pollution and natural disasters.
• This guarantee is not valid for installations outside the United Kingdom.
• Any consequential loss, loss of profits, revenues or receipts howsoever arising from any non-conformity or defect affecting the product or from any delay in repair or replacement of the product.
• Any loss or damage caused by delay in conduct of services or supply of parts required to rectify the non-conformity or defect. (provided Kingspan Environmental will use all reasonable efforts to ensure services are performed on a timely basis).
• For repair or replacement of any Product consumables or decorative finishes, such as filters and casings.
This guarantee does not affect any legal rights you may have as a consumer under applicable national legislation governing your purchase of this product
Kingspan Environmental shall make final determination as to the validity of any guarantee claim, and shall be entitled to charge you all reasonable costs incurred in investigating the claim where there is no fault found, or the guarantee claim is rejected in accordance with these conditions.

Customer Service Department
Kingspan Environmental
Tadman Street
WAKEFIELD
WF1 5QU
U.K

GUARANTEE REGISTRATION CARD

To be completed by the home owner. Please use this card to register within 30 days of commissioning / occupation if new build to benefit from the Kingspan Environmental 2 year guarantee.

By completing this form, you consent to Kingspan Renewables holding and using those details for all purposes directly related to the administration and conduct of guarantee services. Apart from the necessary usage, your personal data will not be disclosed to third parties by Kingspan Environmental.

Home Owner Name

Home Address

Post code

Make of product

Model/size

Serial Number

Installers Contact details
(can be found in benchmark log book)

Date of installation
can be found in benchmark log book)

Signature of homeowner

Date

Or Signature of developer
(If new build)

Date

TECHNICAL SPECIFICATIONS

PRESSURE SPECIFICATIONS

Maximum Inlet Water Pressure	12 Bar
Operating Pressure	3.0 Bar
Expansion Valve Opening Pressure	6.0 Bar
Expansion Vessel Charge Pressure	3.0 Bar
Maximum Operating Pressure	7.0 Bar
Opening Pressure of T & P Valve	7.0 Bar
Opening Temperature of T & P Valve	90°C
Maximum Pressure on Primary Circuit (Indirect & Solar Coil)	3.5 Bar

DIRECT IMMERSION ELEMENT SPECIFICATIONS

Element Rating	3kW 240 V
Thread Type	1 3/4" BSP
Fuse Requirement	13A via Double Pole Switch
Control Thermostat for Element - Temperature Range	45°C - 65°C
High Limit Thermostat for Element - Temperature Set Point	85°C

INDIRECT IMMERSION ELEMENT SPECIFICATIONS

Element Rating	3kW 240 V
Thread Type	1 3/4" BSP
Fuse Requirement	13A via Double Pole Switch
Control Thermostat for Element - Temperature Range	45°C - 65°C
High Limit Thermostat for Element - Temperature Set Point	75°C

SPECIFICATION

CYLINDER DETAILS & PERFORMANCE

PRODUCT CODE	WEIGHT EMPTY	WEIGHT FULL	CAPACITY	Designated Solar Volume	Fossil Fuel Volume	HEAT-UP TIME	70% RE-HEAT TIME	INDIRECT COIL SURFACE AREA	INDIRECT COIL CAPACITY	INDIRECT COIL kW RATING	SOLAR COIL SURFACE AREA	SOLAR COIL CAPACITY	Heat Loss (kW/24Hr)
TRIBUNE DIRECT SLIMLINE													
TDS60	20	80	60	-	-	55m	-	N/A	N/A	N/A	N/A	N/A	0.99
TDS90	29	120	90	-	-	80m	-	N/A	N/A	N/A	N/A	N/A	1.05
TDS120	38	160	120	-	-	105m	-	N/A	N/A	N/A	N/A	N/A	1.12
TDS150	46	200	150	-	-	125m	-	N/A	N/A	N/A	N/A	N/A	1.29
TDS180	54	235	180	-	-	140m	-	N/A	N/A	N/A	N/A	N/A	1.37
TDS210	60	270	210	-	-	160m	-	N/A	N/A	N/A	N/A	N/A	1.64
TRIBUNE INDIRECT SLIMLINE													
TIS60	26	90	60	-		10m 45s	8m 02s	0.67	3.69	17.2	N/A	N/A	0.99
TIS90	36	130	90	-		17m 22s	15m 12s	0.67	3.69	16.1	N/A	N/A	1.05
TIS120	44	165	120	-		25m 01s	16m 25s	0.67	3.69	19.0	N/A	N/A	1.12
TIS150	52	205	150	-		26m 24s	19m 37s	0.77	4.26	19.5	N/A	N/A	1.29
TIS180	60	240	180	-		32m 14s	23m 05s	0.77	4.26	20.4	N/A	N/A	1.37
TIS210	68	280	210	-		36m 36s	27m 40s	0.77	4.26	23.4	N/A	N/A	1.64
TRIBUNE DIRECT													
TD90	25	115	90	-	-	85m	-	N/A	N/A	N/A	N/A	N/A	0.91
TD120	30	150	120	-	-	110m	-	N/A	N/A	N/A	N/A	N/A	1.05
TD150	35	185	150	-	-	135m	-	N/A	N/A	N/A	N/A	N/A	1.23
TD180	40	220	180	-	-	160m	-	N/A	N/A	N/A	N/A	N/A	1.32
TD210	45	255	210	-	-	185m	-	N/A	N/A	N/A	N/A	N/A	1.58
TD250	50	300	250	-	-	225m	-	N/A	N/A	N/A	N/A	N/A	1.84
TD300	55	355	300	-	-	270m	-	N/A	N/A	N/A	N/A	N/A	2.10
TRIBUNE INDIRECT													
TI90	30	120	90	-		20m 25s	14m 18s	0.67	3.69	15.78	N/A	N/A	0.91
TI120	35	155	120	-		23m 47s	18m 00s	0.67	3.69	18.35	N/A	N/A	1.05
TI150	40	190	150	-		29m 36s	20m 35s	0.77	4.26	19.07	N/A	N/A	1.23
TI180	45	225	180	-		31m 58s	22m 47s	0.77	4.26	20.28	N/A	N/A	1.32
TI210	50	260	210	-		33m 05s	26m 16s	0.86	4.83	23.08	N/A	N/A	1.58
TI250	55	305	250	-		41m 18s	28m 20s	0.86	4.83	24.40	N/A	N/A	1.84
TI300	60	360	300	-		46m 01s	32m 52s	0.86	4.83	24.87	N/A	N/A	2.10
TRIBUNE ECOCYL DIRECT													
TDS60ECO	25	85	60	-	-	55m	-	N/A	N/A	N/A	N/A	N/A	0.86
TDS90ECO	30	120	90	-	-	80m	-	N/A	N/A	N/A	N/A	N/A	0.89
TDS120ECO	35	155	120	-	-	105m	-	N/A	N/A	N/A	N/A	N/A	0.96
TDS150ECO	40	190	150	-	-	125m	-	N/A	N/A	N/A	N/A	N/A	1.06
TDS180ECO	45	225	180	-	-	140m	-	N/A	N/A	N/A	N/A	N/A	1.19
TDS210ECO	50	260	210	-	-	160m	-	N/A	N/A	N/A	N/A	N/A	1.36

PRODUCT CODE	WEIGHT EMPTY	WEIGHT FULL	CAPACITY	Designated Solar Volume	Fossil Fuel Volume	HEAT-UP TIME	70% RE-HEAT TIME	INDIRECT COIL SURFACE AREA	INDIRECT COIL CAPACITY	INDIRECT COIL kW RATING	SOLAR COIL SURFACE AREA	SOLAR COIL CAPACITY	Heat Loss (kW/24Hr)
TRIBUNE ECOCYL INDIRECT													
TIS60ECO	30	90	60	-		10m 45s	8m 02s	0.67	3.69	17.2	N/A	N/A	0.86
TIS90ECO	35	125	90	-		17m 22s	15m 12s	0.67	3.69	16.1	N/A	N/A	0.89
TIS120ECO	36	156	120	-		25m 01s	16m 25s	0.67	3.69	19.0	N/A	N/A	0.96
TIS150ECO	45	195	150	-		26m 24s	19m 37s	0.77	4.26	19.5	N/A	N/A	1.06
TIS180ECO	36	216	180	-		32m 14s	23m 05s	0.77	4.26	20.4	N/A	N/A	1.19
TIS210ECO	55	265	210	-		36m 36s	27m 40s	0.77	4.26	23.4	N/A	N/A	1.36
TRIBUNE SOLAR DIRECT													
TSS150	40	190	150		-	31m 05s	22m 16s	N/A	N/A	N/A	0.67	3.69	1.23
TSS180	45	225	180		-	33m 30s	23m 34s	N/A	N/A	N/A	0.67	3.69	1.32
TSS210	50	260	210		-	33m 05s	26m 33s	N/A	N/A	N/A	0.86	4.83	1.58
TSS250	55	305	250		-	41m 18s	28m 20s	N/A	N/A	N/A	0.86	4.83	1.84
TSS300	60	360	300		-	46m 01s	32m 52s	N/A	N/A	N/A	0.86	4.83	2.10
TRIBUNE SOLAR INDIRECT													
TT150	45	200	150			22m 50s	11m 44s	0.67	3.69	17.2	0.67	3.69	1.23
TT180	50	235	180			25m 15s	17m 02s	0.67	3.69	20.2	0.67	3.69	1.32
TT210	55	270	210			28m 31s	15m 50s	0.77	4.26	23.4	0.86	4.83	1.58
TT250	60	315	250			31m 42s	22m 42s	0.77	4.26	28.3	0.86	4.83	1.84
TT300	65	370	300			36m 04s	21m 30s	0.86	4.83	29.2	0.86	4.83	2.10
TRIBUNE INDIRECT PRE-PLUMBED													
TI120P4	45	165	120	-		23m 47s	18m 00s	0.67	3.69	18.35	N/A	N/A	1.05
TI150P4	50	200	150	-		31m 05s	22m 16s	0.77	4.26	19.07	N/A	N/A	1.23
TI180P4	55	235	180	-		31m 58s	22m 47s	0.77	4.26	20.28	N/A	N/A	1.32
TI210P4	60	270	210	-		35m 30s	26m 16s	0.86	4.83	23.08	N/A	N/A	1.58
TI250P4	65	315	250	-		41m 08s	30m 06s	0.86	4.83	24.40	N/A	N/A	1.84
TI300P4	70	320	300	-		49m 40s	36m 12s	0.86	4.83	24.87	N/A	N/A	2.10
TRIBUNE SOLAR INDIRECT PRE-PLUMBED													
TT180P4	60	240	180			25m 15s	17m 02s	0.67	3.69	20.2	0.67	3.69	1.32
TT210P4	65	275	210			28m 31s	15m 50s	0.77	4.26	23.4	0.86	4.83	1.58
TT250P4	70	320	250			31m 42s	22m 42s	0.77	4.26	28.3	0.86	4.83	1.84
TT300P4	75	375	300			36m 04s	21m 30s	0.86	4.83	29.2	0.86	4.83	2.10

BENCHMARK SCHEME

The installer must follow the Benchmark code of practice for the Benchmark certification to be valid. The Benchmark code of practice can be found on the internet using the following internet site www.centralheating.co.uk and follow links.

Kingspan is a licensed member of the Benchmark Scheme which aims to improve the standards of installation and commissioning of domestic heating and hot water systems in the UK and to encourage regular servicing to optimise safety, efficiency and performance.

Benchmark is managed and promoted by the Heating and Hotwater Industry Council. For more information visit www.centralheating.co.uk

Please ensure that the installer has fully completed the Benchmark Checklist on the inside back pages of the installation instructions supplied with the product and that you have signed it to say that you have received a full and clear explanation of its operation.

The installer is legally required to complete a commissioning checklist as a means of complying with the appropriate Building Regulations (England and Wales).

All installations must be notified to Local Area Building Control either directly or through a Competent Persons Scheme. A Building Regulations Compliance Certificate will then be issued to the customer who should, on receipt, write the Notification Number on the Benchmark Checklist. This product should be serviced regularly to optimise its safety, efficiency and performance. The service engineer should complete the relevant Service Record on the Benchmark Checklist after each service. The Benchmark Checklist will be required in the event of any warranty.

MAINS PRESSURE HOT WATER STORAGE SYSTEM COMMISSIONING CHECKLIST

This Commissioning Checklist is to be completed in full by the competent person who commissioned the storage system as a means of demonstrating compliance with the appropriate Building Regulations and then handed to the customer to keep for future reference.

Failure to install and commission this equipment to the manufacturer's instructions may invalidate the warranty but does not affect statutory rights.

Customer Name ______ Telephone Number ______
Address ______
Cylinder Make and Model ______
Cylinder Serial Number ______
Commissioned by *(print name)* ______ Registered Operative ID Number ______
Company Name ______ Telephone Number ______
Company Address ______
______ Commissioning Date ______

To be completed by the customer on receipt of a Building Regulations Compliance Certificate*:
Building Regulations Notification Number *(if applicable)* ______

ALL SYSTEMS PRIMARY SETTINGS (indirect heating only)

Is the primary circuit a sealed or open vented system?	Sealed ☐	Open ☐
What is the maximum primary flow temperature?		☐ °C

ALL SYSTEMS

What is the incoming static cold water pressure at the inlet to the system?			☐ *bar*
Has a strainer been cleaned of installation debris (if fitted)?		Yes ☐	No ☐
Is the installation in a hard water area (above 200ppm)?		Yes ☐	No ☐
If yes, has a water scale reducer been fitted?		Yes ☐	No ☐
What type of scale reducer has been fitted?			
What is the hot water thermostat set temperature?			☐ °C
What is the maximum hot water flow rate at set thermostat temperature (measured at high flow outlet)?			☐ *l/min*
Time and temperature controls have been fitted in compliance with Part L of the Building Regulations?			Yes ☐
Type of control system (if applicable)	Y Plan ☐	S Plan ☐	Other ☐
Is the cylinder solar (or other renewable) compatible?		Yes ☐	No ☐
What is the hot water temperature at the nearest outlet?			☐ °C
All appropriate pipes have been insulated up to 1 metre or the point where they become concealed			Yes ☐

UNVENTED SYSTEMS ONLY

Where is the pressure reducing valve situated (if fitted)?		
What is the pressure reducing valve setting?		☐ *bar*
Has a combined temperature and pressure relief valve and expansion valve been fitted and discharge tested?	Yes ☐	No ☐
The tundish and discharge pipework have been connected and terminated to Part G of the Building Regulations		Yes ☐
Are all energy sources fitted with a cut out device?	Yes ☐	No ☐
Has the expansion vessel or internal air space been checked?	Yes ☐	No ☐

THERMAL STORES ONLY

What store temperature is achievable?	☐ °C
What is the maximum hot water temperature?	☐ °C

ALL INSTALLATIONS

The hot water system complies with the appropriate Building Regulations	Yes ☐
The system has been installed and commissioned in accordance with the manufacturer's instructions	Yes ☐
The system controls have been demonstrated to and understood by the customer	Yes ☐
The manufacturer's literature, including Benchmark Checklist and Service Record, has been explained and left with the customer	Yes ☐

Commissioning Engineer's Signature ______

Customer's Signature ______
(To confirm satisfactory demonstration and receipt of manufacturer's literature)

*All installations in England and Wales must be notified to Local Authority Building Control (LABC) either directly or through a Competent Persons Scheme. A Building Regulations Compliance Certificate will then be issued to the customer.

benchmark
COLLECTIVE MARK
THE MARK OF QUALITY FOR THE INSTALLATION, COMMISSIONING AND SERVICING OF DOMESTIC HEATING AND HOT WATER SYSTEMS

©Heating and Hotwater Industry Council (HHIC)

SERVICE RECORD

It is recommended that your hot water system is serviced regularly and that the appropriate Service Record is completed.

Service Provider
Before completing the appropriate Service Record below, please ensure you have carried out the service as described in the manufacturer's instructions.

SERVICE 1 Date

Engineer Name

Company Name

Telephone Number

Comments

Signature

SERVICE 2 Date

Engineer Name

Company Name

Telephone Number

Comments

Signature

SERVICE 3 Date

Engineer Name

Company Name

Telephone Number

Comments

Signature

SERVICE 4 Date

Engineer Name

Company Name

Telephone Number

Comments

Signature

SERVICE 5 Date

Engineer Name

Company Name

Telephone Number

Comments

Signature

SERVICE 6 Date

Engineer Name

Company Name

Telephone Number

Comments

Signature

SERVICE 7 Date

Engineer Name

Company Name

Telephone Number

Comments

Signature

SERVICE 8 Date

Engineer Name

Company Name

Telephone Number

Comments

Signature

SERVICE 9 Date

Engineer Name

Company Name

Telephone Number

Comments

Signature

SERVICE 10 Date

Engineer Name

Company Name

Telephone Number

Comments

Signature

NOTES

SPECIFICATION SUMMARY

SPECIFICATION SUMMARY

MATERIALS

Inner shell - Duplex Stainless Steel
Coil - 22mm Diameter Stainless Steel
Bosses - Stainless Steel
Every TRIBUNE HE cylinder is water tested to a pressure of 15 bar.

INSULATION

Polyurethane foam, nominal thickness 50mm. & 85mm
The foam is CFC-Free and HCFC-Free.
The foam has an Ozone Depletion Potential of Zero and a Global Warming Potential of 3.1

CASEWORK

Corrosion proofed steels throughout
Durable, stove enamelled, gloss white paint finish

ANODE

None fitted/none required

EXPANSION VESSEL

12 Litre size with 60, 90, 120 and 150 Litre models
18 Litre size with 180, 210 and 250 Litre models
25 Litre size with 300 Litre models

CONTROL SETTINGS

Pressure Reducing Valve - 3 Bar
Expansion Relief Valve - 6 Bar
Pressure and Temperature Relief Valve - 7 Bar/90°C
High Limit Thermostat in Dual Thermostat - 85°C
High Limit Thermostat in Immersion Heater - 85°C

IMMERSION HEATER

1¾" BSP Parallel Threaded Head
Long Life Incoloy Sheathed Low Noise Element 14" Long
Long Life Incoloy Sheathed Thermostat Pocket 11" Long
Brazed Construction
Combined Thermostat and Safety Cutout
Element Rating 3kW at 240V A/C

APPROVALS

KIWA Approved to Building Regulations G3 & L
CE Compliant and fitted with a BEAB Approved Immersion Heater

Range Cylinders, part of Kingspan Environmental , is a major manufacturer of Domestic Hot Water storage systems in the UK and offers the trade products backed by the service and technical development skills that only a company of its size can.
All sites are licensed to British Standards Quality Assurance BS EN ISO 9001 : 2008 and Range is a BSi registered firm. This means that all manufacturing plants are monitored by an independent inspectorate and the quality systems employed by Range Cylinders meet the stringent requirements set down.
Specifiers, users and stockists can depend on Range for consistent quality and supply. Range continues to develop energy saving and innovative hot water products for domestic and commercial applications.

Benchmark places responsibilities on both manufacturers and installers. The purpose is to ensure that customers are provided with the correct equipment for their needs, that it is installed, commissioned and serviced in accordance with the manufacturer's instructions by competent persons and that it meets the requirements of the appropriate Building Regulations. The Benchmark Checklist can be used to demonstrate compliance with Building Regulations and should be provided to the customer for future reference.

Installers are required to carry out installation, commissioning and servicing work in accordance with the Benchmark Code of Practice which is available from the Heating and Hotwater Industry Council who manage and promote the Scheme. Visit www.centralheating.co.uk for more information.

Kingspan Environmental have a policy of continuous product development and may introduce product modifications from time to time. As a consequence details given in this brochure are subject to alteration without notice. E&OE.

Customer Services: 0845 260 7260

Kingspan Hot Water Systems

Kingspan Environmental
Tadman Street, Wakefield
WF1 5QU
Tel: 0845 260 0258
Fax: 0845 260 0259

Aftersales:
0845 260 7260
Technical Support
0845 812 0007

Customer Fax Line:
0845 260 7261

www.range-cylinders.co.uk
www.kingspan-enviro.co.uk

Kingspan Environmental Ltd. Registered Office: Tadman Street, Wakefield WF1 5QU Registered in Northern Ireland